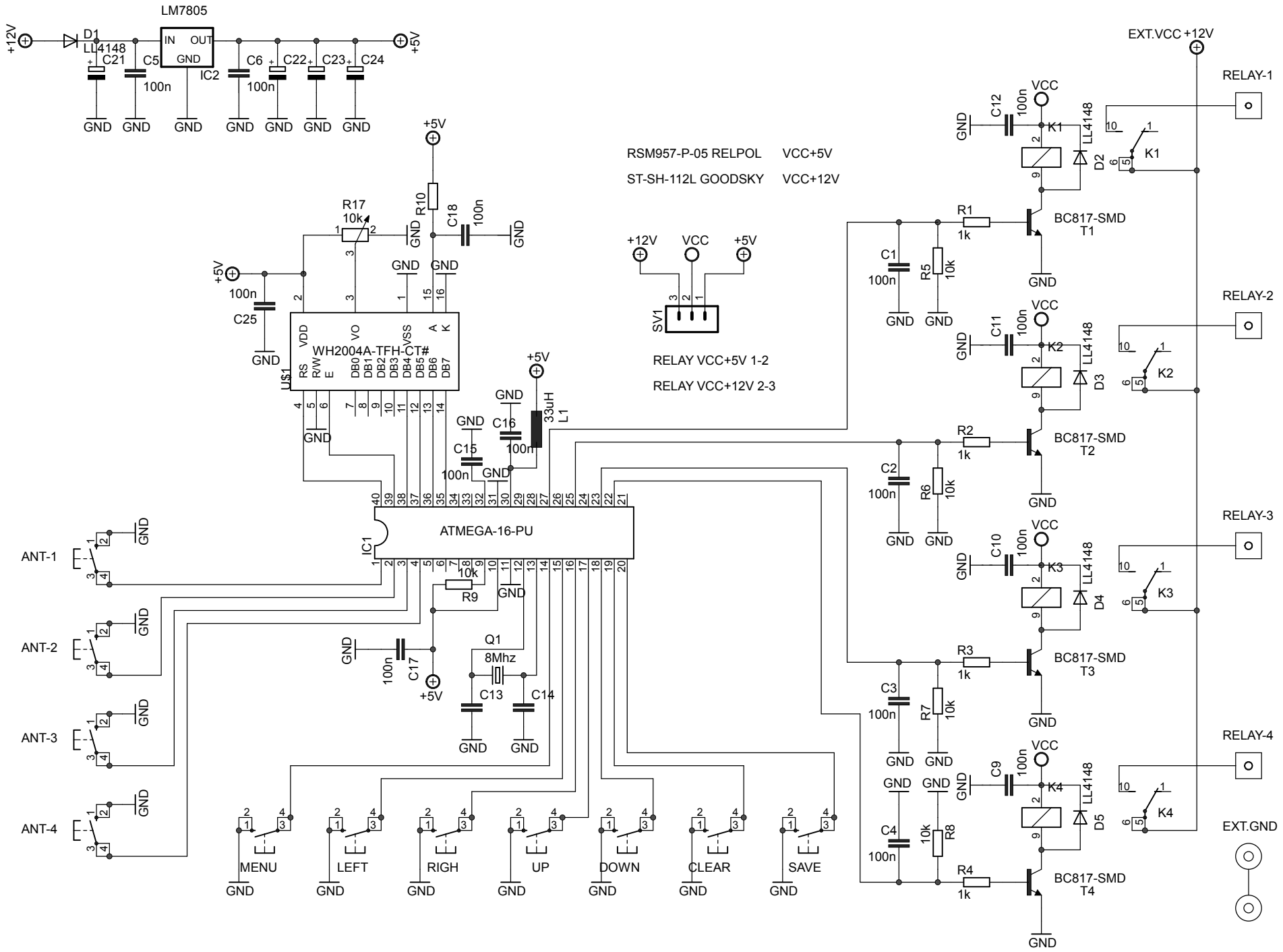

2016-07-02 14:45:59 C:\Users\Robert\Desktop\ANNT_SEL\AN_SE.sch (Sheet: 1/1)